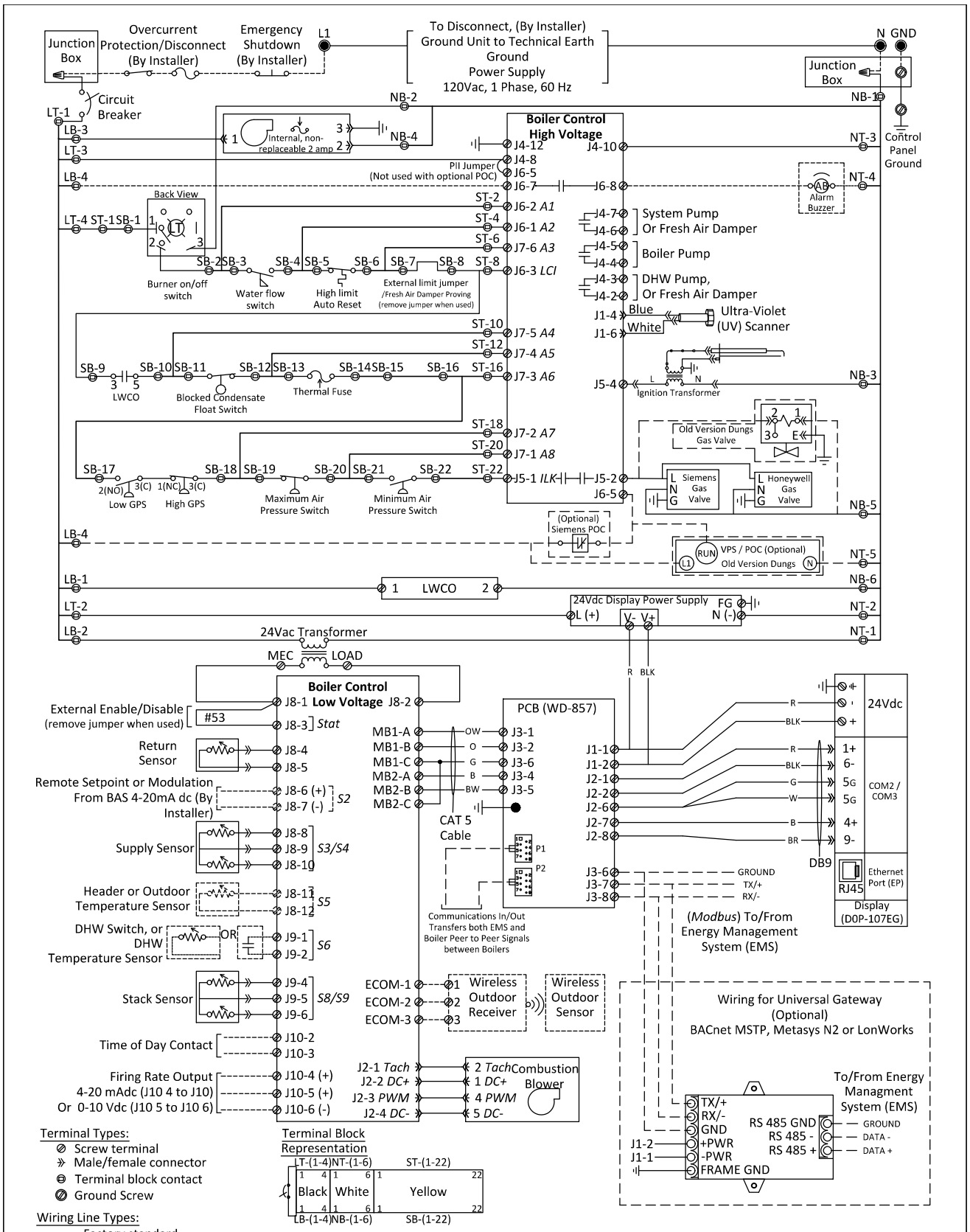

Terminal Types:
- Screw terminal
- Male/female connector
- Terminal block contact
- Ground Screw

Wiring Line Types:
- Factory standard
- Terminal block conductor
- Field wiring or options
- Ignition cable

Annotations:
- Optional Part
- Field Installed

Terminal Block Representation

CAT 5 CABLE LEGEND
OW = ORANGE/WHITE
O = ORANGE
GW = GREEN/WHITE
B = BLUE
BW = BLUE/WHITE
G = GREEN
BRW = BROWN/WHITE
BR = BROWN
R = RED
BLK = BLACK
W = WHITE

REV: 11	EN: 34-1672	DATE: 09/24/2021	DWN: SPS	ENG: TWM	APPD:	APPD:

CORRECTED LIMIT SWITCH ORIENTATIONS TO MATCH HARNESS LABELS.
AFFECTED LIMITS: High Limit Auto Reset, Low GPS, High GPS, Max APS, Min APS

REFERENCE ASME Y14.5M-1994 FOR GEOMETRIC TOLERANCES. ALL DIMENSIONS IN INCHES. DRAWING NOT TO BE SCALED. NON-BASIC DIMENSIONAL AND ANGULAR TOLERANCES UNLESS OTHERWISE NOTED:
DECIMALS: X.X – ±0.1, X.XX – ±0.03, X.XXX – ±0.005. FRACTIONAL: ±1/32. ANGULAR: ±1°

THIS DOCUMENT CONTAINS CONFIDENTIAL INFORMATION WHICH IS THE PROPERTY OF BRYAN STEAM LLC. THIS DOCUMENT MAY NOT BE REPRODUCED, TRANSFERRED OR USED, OR ITS CONTENTS DISCLOSED, WITHOUT THE WRITTEN PERMISSION OF THE OWNER.

FIRST USE	MATERIAL
ARCTIC 1000	N/A
PART NUMBER	TITLE
N/A	ARCTIC WIRING 1000

PROPERTY OF
BRYAN BOILERS & THERMAL SOLUTIONS

DRAWING NUMBER	SCALE	DWG SIZE	SHEET
WD-866	N/A	B	1 OF 1